CONTINUOUS BAG SEALING MACHINE

Wide range of models for choice horizontal, vertical portable sealing configurations. Light or heavy duty single or twin conveyor table. Special models are available.

CE

INDEX

1. APPLICATIONS:

This machine is well suited for sealing various bag materials as PE, PP, PVC etc. plastic bags. It is ideal for the applications for the foods, medical, hardware, stationery, toys, chemical materials, garments etc. packing purpose.

2. CONSTRUCTION

This machine is constructed of a machine frame, a speed reducer, a heating and dissipation system, a driving and conveying system, a sealing and printing device, speed regulation system, electronic controlled thermostat, product counter etc. it also features temperature adjustment, sealing band tension adjustment, speed adjustment, and sealing gap adjustment. The sealing band, nylon band and conveyor are synchronized with the motor. Once the power is turned on, the heating components are then heated and the heater temperature raises, adjusting the sealing temperature and the speed the plastic bags, are transmitted by the conveyor. When the bags are fed into the gap between the two running sealing bands, they will be clamped and fed forward to the heater block. The heat from heater block will seal the bags through the sealing band. The bags are then fed to the cooling blocks for fast cool down. The bags move forward to the knurling wheels or printing wheels to secure the seal of the bag or for printing words. Bags then move forward for product counting by the nylon band and conveyor to the outfeed. The entire sealing operation is then completed.

3. Legend of the machine (Horizontal Model)

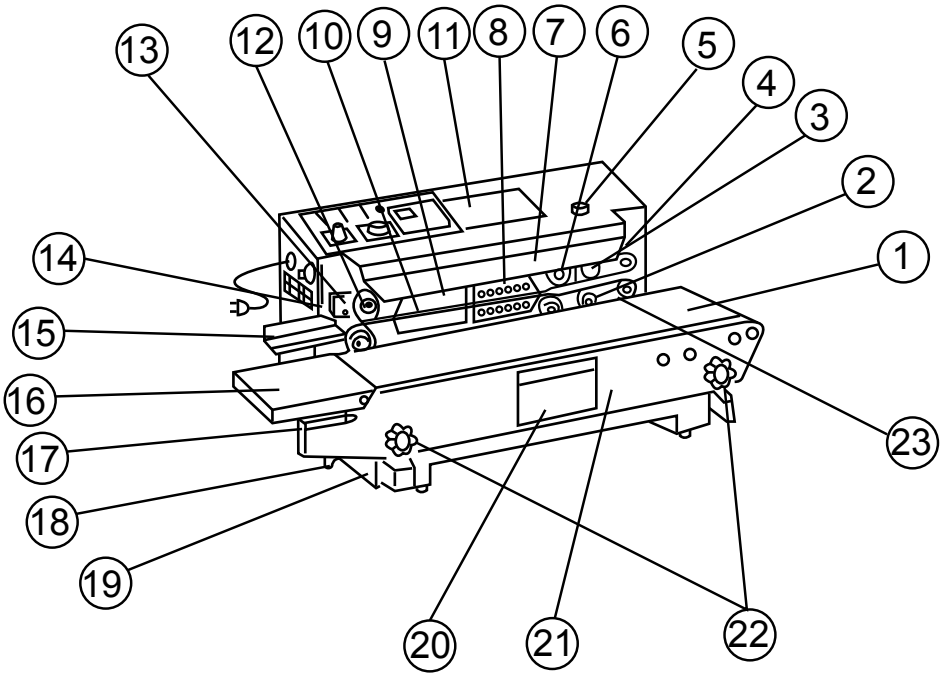

(Fig. 1)

1.CONVEYOR BELT
2.RUBBER WHEEL
3.KNURLING WHEEL (PRINTING WHEEL)
4.KNURLING WHEEL SEAT
5.KNURLING WHEEL ASSEMBLY
6.BELT DRIVING WHEEL
7.HEATING PIECE.GUARD COVER
8.COOLING PIECE
9.HEATING PIECt
10.SEALING BELT
11.CONTROL PANEL
12.STEEL BELT WHEEL
13.SEALING BELT POSITION ADJUST SCREW
14.SEALING BELT TENSION ADJUST SCREW
15.SEALING POSITION ADJUST PLATE
16.CONVEYOR TABLE
17.CONVEYOR BELT TRACK ADJUST SCREW
18.CONVEYOR TABLE FIXING KNOB
19.CONVEYOR FIXING BRACKET
20.SAFETY RULE INSTRUCTION PLATE
21.CONVEYOR TABLE
22.CONVEYOR TABLE POSITION ADJUST KNOB
23.TRANSMISSION SHAFT POSITION ADJUST NUT

4. Legend of the Machine (Vertical Model)

1. BASE CONNECTING PLATE
2. CONVEYOR TABLE
3. SUPPORT POST
4. LEVEL GEAR HOUSING
5. TRANSMISSION SHAFT
6. POWER SIRES
7. FUSE HOLDER
8. SUPPORT POST CONNECTION PLATE
9. HIGH LOW POSITION FIXING KNOB
10. CONVEYOR TABLE POSITION PLATE
11. CONVEYOR TABLE POSITION FIXING KNOB

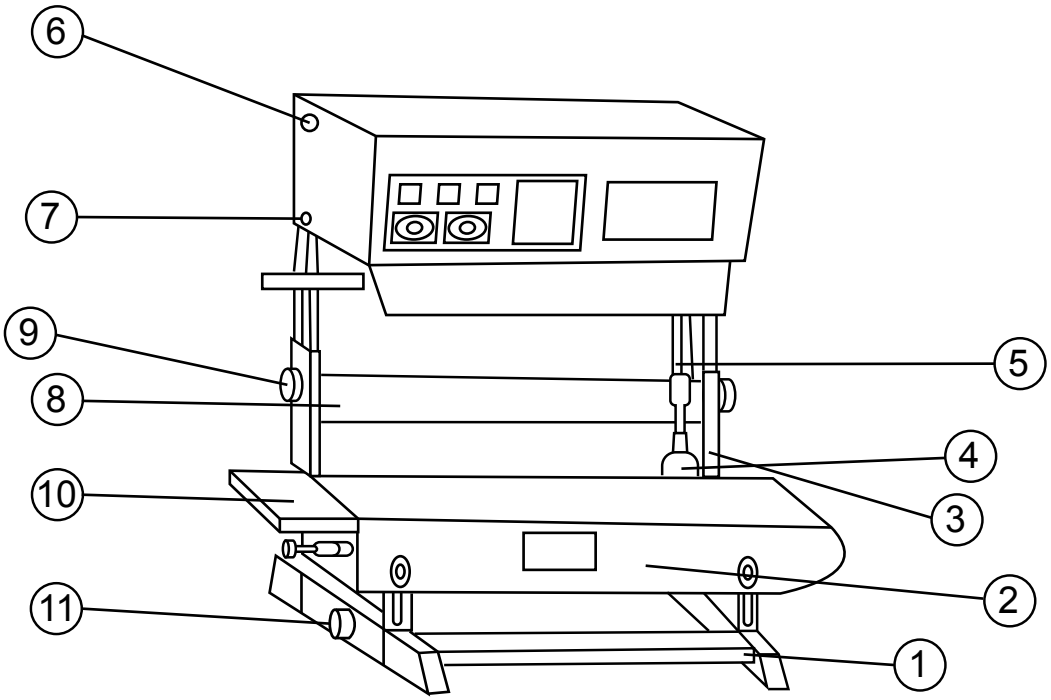

(Fig. 2)

5. Floor Type Sealing Machine

1. CASTOR
2. BASE PLATE
3. SUPPORT POST
4. HIGH LOW POSITION ADJUST KNOB
5. UPPER SUPPORT POST
6. COUNTER
7. FIXING SCREW

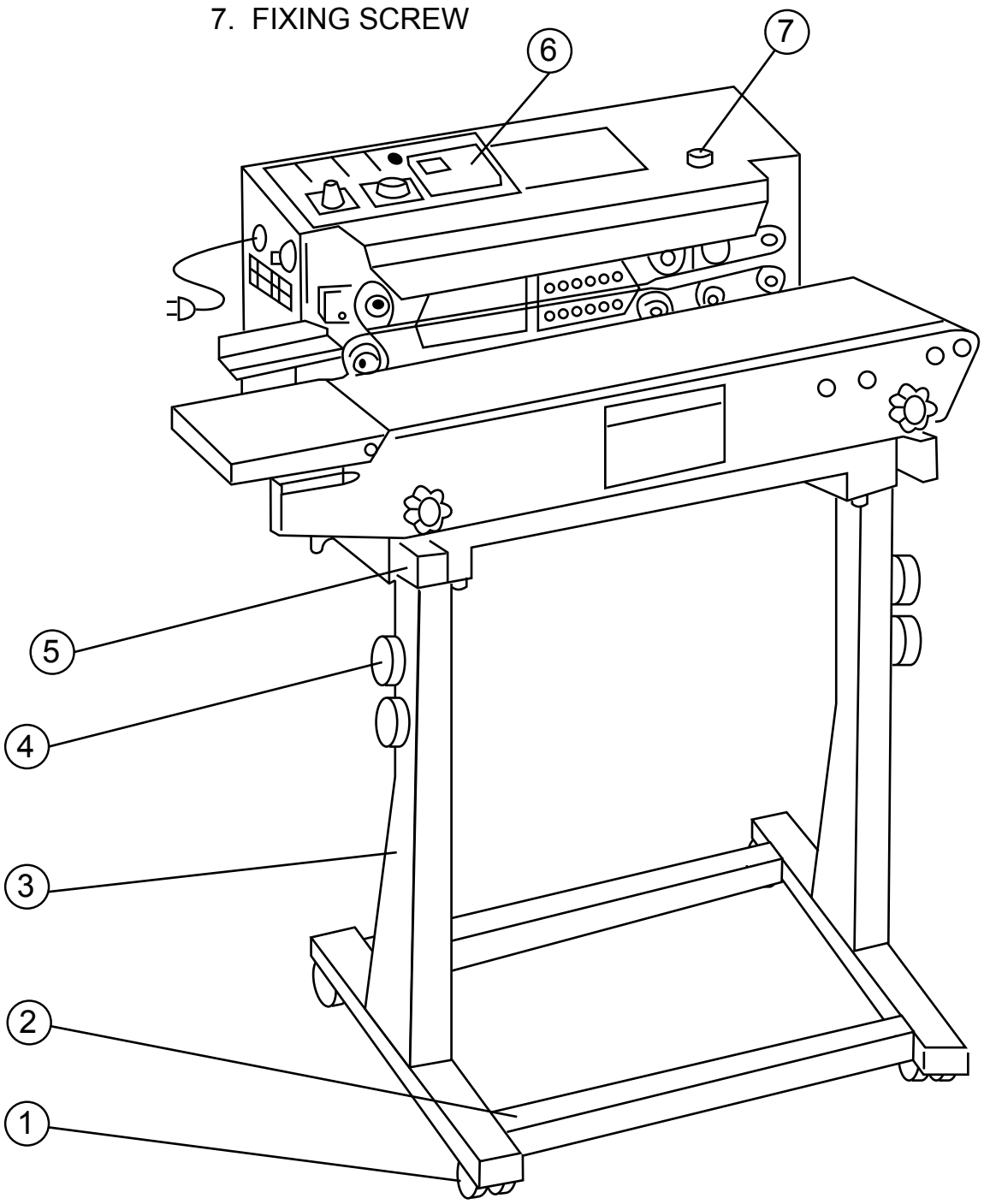

(Fig. 3)

6. SPECIFICATIONS

VOLTAGE 110V/220V

FREQUENCY ..... 50/60 I-IZ

POWER ..... 0.5 KW.

SEALING SPEED ..... 0-12 meter per minute (adjustable)

WIDTH OF SEALING ..... 5-15 MM (adjustable)

THICKNESS OF BAG ..... 0.02 -0.8 MM

SEALING BAG MATERIAL ..... no restriction

LENGTH OF SEALING ..... no restriction

RANG OF TEMPERATURE ..... 0 - 399C

COUNTER DISPLAY ..... photo-cell counting, LED display

MAX. BELT LOADING CAPACITY ..... under 10 kg.

5. ELECTRICAL WIRING DIAGRAM

The electric operation principle is illustrated as Fig. 4

The electronic controlled temperature control system is consisted by the thermostator thermos couple, heater tubes set etc. The heater tubes accept heating

voltage is 110/220V. The electronic temperature controller controls the heating

temperature (Sealing temperature). When the sealing temperature is lower than the setting temperature on electronic temperature controller, in this case the green indication lamp on electronic temperature controller will light up. When the heater tube with 110/220V

voltage is connected for heating to raise temperature, until the heating temperature raise to the setting temperature on electronic temperature controller then red indication lamp will light up and shut off the heater source for heater tube. This will maintain the temperature at the desired setting temperature. The sealing temperature is adjusted from the temperature regulator.

The sealing speed control system consist of electronic speed regulator and DC system.

The sealing speed is selected by the speed regulator on the controller panel.

This machine is available to be mounted with product counter display. It -is employed with the advanced photo electric counting circuit for accurate counting the numbers of products. Displayed by 4 digit LED. When zero set is required, simply depress the zero set key for return to initial state.

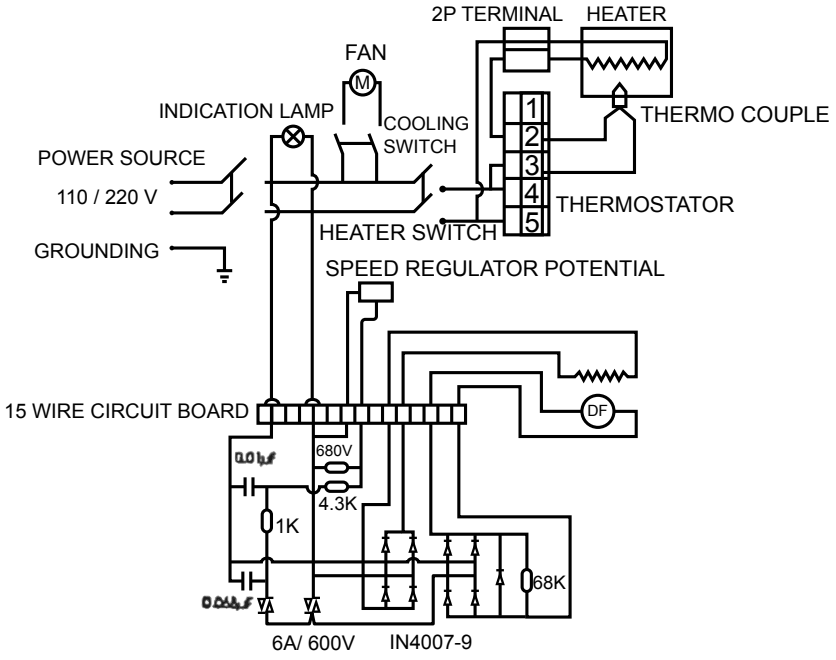

ELECTRIC WIRING DIAGRAM (FIG. 1)

6. ADJUSTMENT AND OPERATION

1. DESCRIPTION OF CONTROL PANEL
   1.) POWER INDICATION LAMP
   2.) POWER SWITCH
   3.) COUNTER DISPLAY
   4.) COUNTER SWITCH
   4.) RESET·
   6.) SPEED REGULATOR
   7.) TEMPERATURE CONTROLLER
   8.) HEATER
   9.) COOLING SWITCH

2. ADJUSTMENT:

(1) CONVEYOR TABLE HEIGHT ADJUSTMENT: (SEE FIG. 1)

Loosen the driving shaft adjustment nut (23) using a hook spanner (See Fig. 1). Then loosen the conveyor table with your hands until the desired height adjustment lever and driving shaft adjustment nut.

(2) CONVEYOR TABLE IN/OUT ADJUSTMENT: (SEE FIG. I)

When the conveyor table is to be adjusted in/out, refer to FIG. I Loosen the in/out adjustment lever located at both sides of the conveyor table. Move the conveyor table
· outward with your hands until the desired position is obtained. Then tighten up the tow in/out adjustment levers.

(3) VERTICAL SEALING MACHINE HEIGHT ADJUSTMENT: (SEE FIG. 2)

Lie down the sealing machine on the table. Loosen the driving shaft adjustment nut. Loosen the height adjustment lever (9). Adjust the desired sealing height, tighten up the height adjustment lever. Have the sealing machine stand up. Properly adjust the vertical driving shaft (5) position. Tighten up the driving shaft adjustment nut.

(4) SEALING WIDTI-J ADJUSTMENT: (SEE FIG. I)

Adjust the position ofsealing position adjust plate (15) to width .

(5) SEALING PRESSURE ADJUSTMENT: (SEE FIG. 1)

The knurling (printing) wheel pressure may directly be related with the sealing result. Properly adjust the knurling wheel pressure adjustment knob (5) until clear pattern is obtained. Too high pressure may affect the parts life. Too low pressure, the pattern is not clear, and sealing is not secure.

6.SEALING BAND POSITION ADJUSTMENT (see Fig. 1 and Fig. 6)

In case of sealing band is runrung outward, adjust the sealing band adjust screw D located at the top steel band wheel bracket. In case of sealing band is running inward, adjust screw C located at the steel band wheel bracket. If there is a gap between the top and bottom heating piece and cooling piece, and the sealing band stops, then you need to adjust the sealing band tension adjustment screw, see Fig. 6. Do not adjust the tension to tightly as this may shorten the sealing band life.

7. SETTING THE SEALING SPEED AND SEALING TEMPERATURE.

Properly adjust the sealing speed and sealing temperature on the control panel as according to the sealing band material and its thickness, until the secure sealing result is achieved. There is a relationship between the sealing temperature, sealing material, and sealing speed: For sealing same material, when the temperature is higher, the sealing speed can be higher. For low speed sealing, the sealing temperature can be lower. The thicker bag material, the higher sealing temperature will be required, while at a lower sealing speed. For a proper setting of the parameters see the material and temperature setting reference chart, attached on the machine.

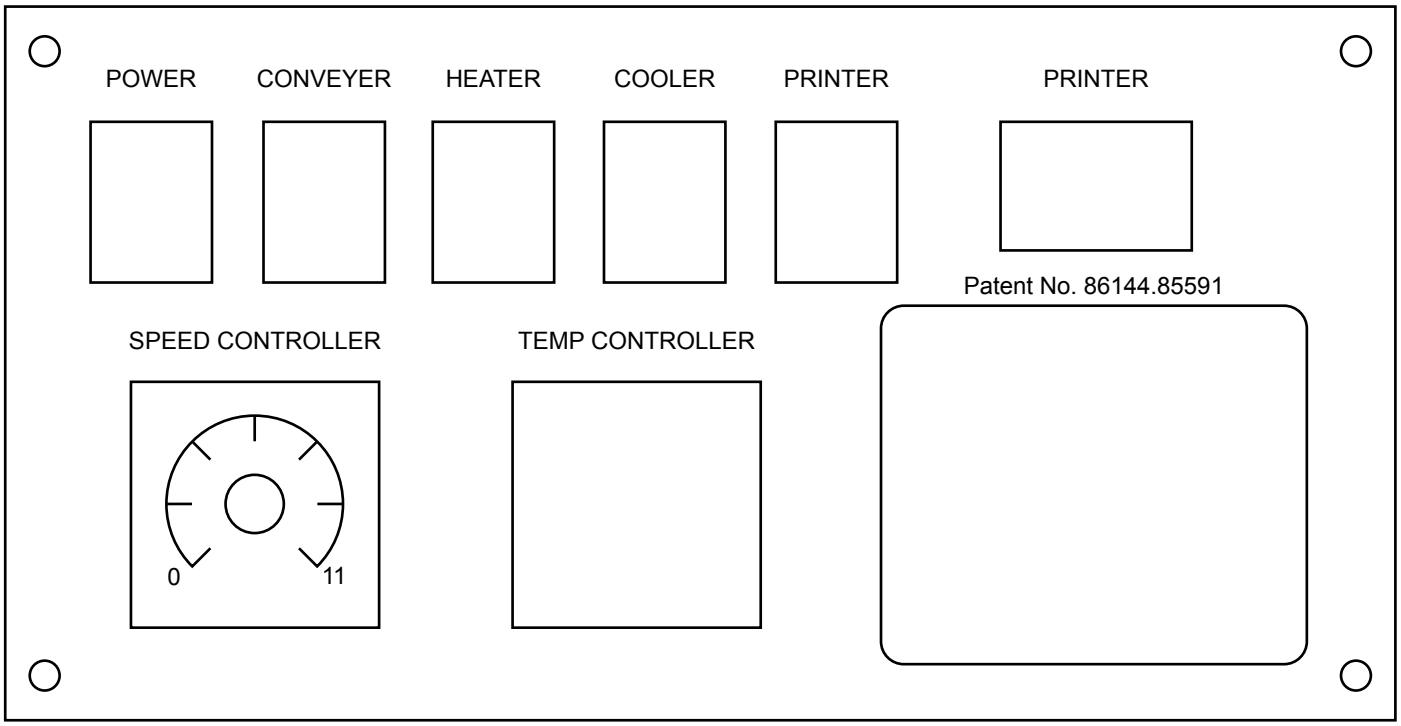

THE PROCEDURES FOR REPLACING THE SEALING BAND

1. Remove the guard cover, swivel the 4 PCs of positioning piece A 90 degree as the direction instructed. And set them on the cooling and heating bronze bracket. Raise the cooling piece and heating piece. Then remove the nylon band.
2. Shift the steel band toward B direction, then remove the sealing band.
3. Fit the new sealing b8:fld and nylon band, swievel positioning pieces back to its place.
4. Otherwise sealing operation cannot be operated.
5. Adjust the sealing band tension screw until proper band tension is obtained.
6. Install the guard cover to its position, Then you may perform machine operations.

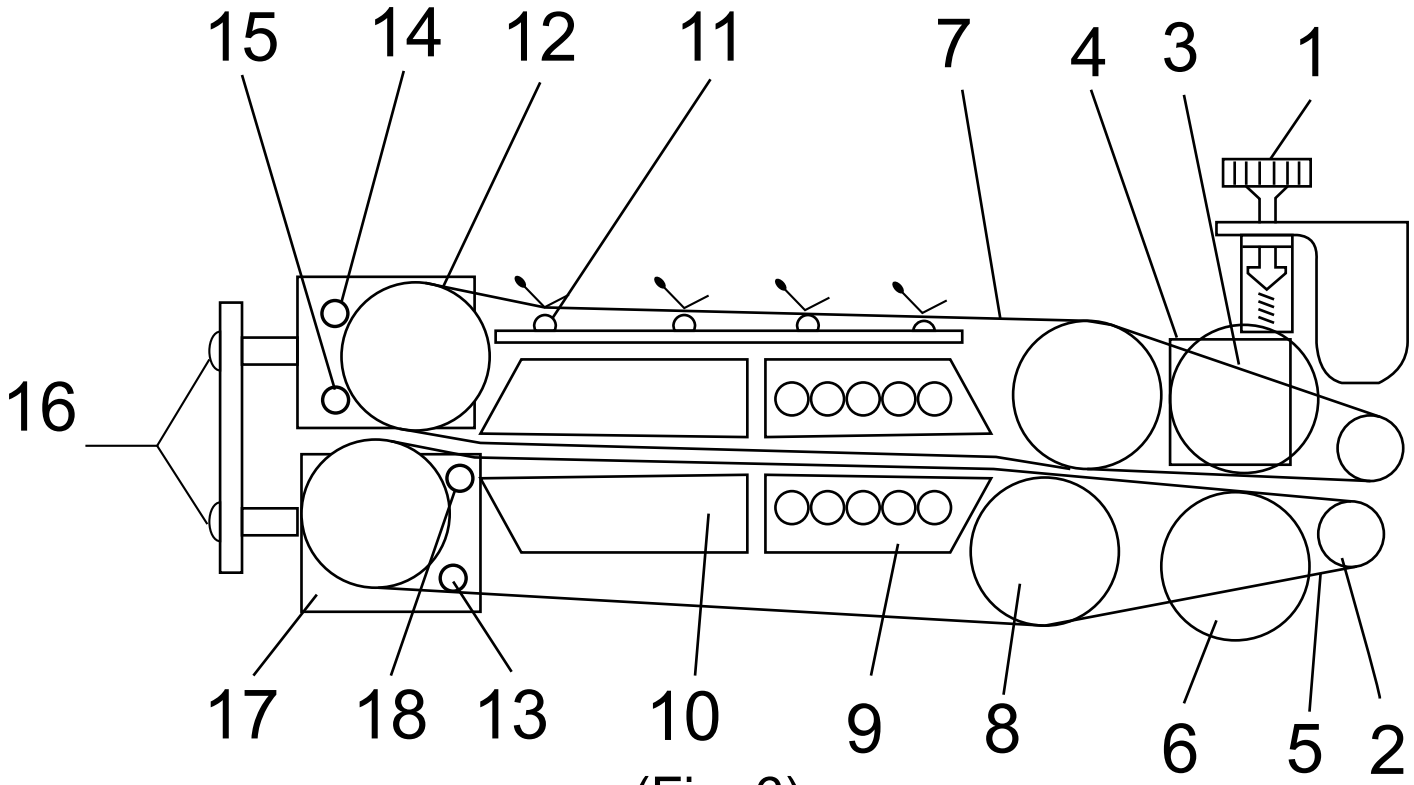

(Fig. 6)

MAINTENANCE

1. Familiar with the sealing machine operations and adjustment before operating this machine.
2. This machine should be properly grounded for safety operation.
3. For initial operation of this machine, or it is not in use for a long period, the heater components may be wetted, so it is recomended to preheat at low temperature some minutes before normal operation.
4. Use proper sealing speed and sealing temperature, and rigorously obey the machine stop procedures. Never have the sealing band under high temperature heating without running as this will burn out the sealing band.
5. For initial operation of this machine, temperature raising should be adjusted gradually to prevent the bag melt and adhere on the sealing band. In case the sealing band or heating block is adhered with melt bag or dirty, immediatly clean it.

OPERATION PROCEDURES

1. Turn on the power source switch, at this time all wheels should run synchronically,

2. Setting the desired speed by turning the speed regulator, turning it rightward for increasing speed gradually.

3. Depress the heating switch, and set the temperature controller switch to the proper operation temperature.

4. Once the red signal lamp light up, that means the setting temperature has reached. At this time the operator may try to seal the bags, and adjust the proper temperature, and knurling pressure unit the satisfied sealing result is obtained. Then the operator shall perform continuous bag sealing operations.

5. For sealing the general PE. material of bags, it is requested to tum on the fan for cooling. For sealing the Poly compound material of bags, it requires much higher temperature range than. Simple bags, however it generally requires no fan cooling.

6. When counter is needed·; simply depress the counter switch to counter position.·

7. When in operation, place the bags to be sealed smoothly against the guide fence and feed it to the heating section, Once the bags are held, it will automatically move forward. Do not. push or pull the bags when it automatically moves, otherwise this may cause an uneven sealing result.

8. TO STOP THE MACHINE:
   In order to ensure the long service life of the sealing belt, before stopping the machine operation, it is recomended to tum off the temperature controller,·then start fan running, at this time still keep sealing machine running until the temperature lower down to the room temperature, then you may turn off the fan, turn off power source switch.

9. CHANGE THE MACHINE FROM HORIZONTAL TO VERTICAL

   1. Fix the two bottom brackets and two middle brackets with M4 screws The concavity of bottom bracket should face inward, and the middle bracket should face downward.

   2. Loosen the adjust knob for conveyor table inward and outward. Pull out the conveyer table, then take out the knob, and the screw. Remove the conveyor table.

   3. Install the conveyor table onto the vertical bottom bracket. Tighten up the fixing lever.

   4. Remove the horizontal short driving shaft. Fit the vertical level gear.

   5. Fit the level gear shaft into the hole on driving shaft. Vertical bracket should be fitted onto the support legs. Adjust the proper sealing height. Install the height adjustment handle.

   6. Have the sealing machine vertically placed. Then it is ready for operation.

10. HOW TO INSTALL THE PRINTING WHEEL

1. RESSURE ADJUSTMENT KNOB GUARD
2. NYLON BAND WHEEL
3. KNURLING WHEEL (PRINTING WHEEL)
4. WHEEL BRACKET
5. NYLON BAND RUBBER WHEEL
6. RUBBER WHEEL
7. SEALING BAND
8. DOUBLE GROVE WHEEL
9. COOLING BLOCK
10. HEATING BLOCK
11. POSITIONING PAD
12. STEEL BAND WHEEL
13. SCREW
14. SEALING BAND IN/OUT ADJUSTMENT SCREW
15. SEALING BAND IN/OUT ADJUSTMENT SCREW
16. SEALING BAND TENSION ADJUSTMENT SCREW
17. STEEL BAND WHEEL BRACKET
18. SCREW

1.) REMOVE GUARD. TIGHTEN the printing wheel pressure adjustment lever.

2). Remove the nylon band. Remove the printing wheel middle shaft fixing screw.

3). Seperate slightly the printing wheel and rubber wheel. Pull out the knurling wheel. Install the knurling wheel or printing wheel.

4). Install printing wheel middle shaft fixing screw. Install the nylon band, properly adjust the printing wheel pressure. The sealer is ready to test.